B - B

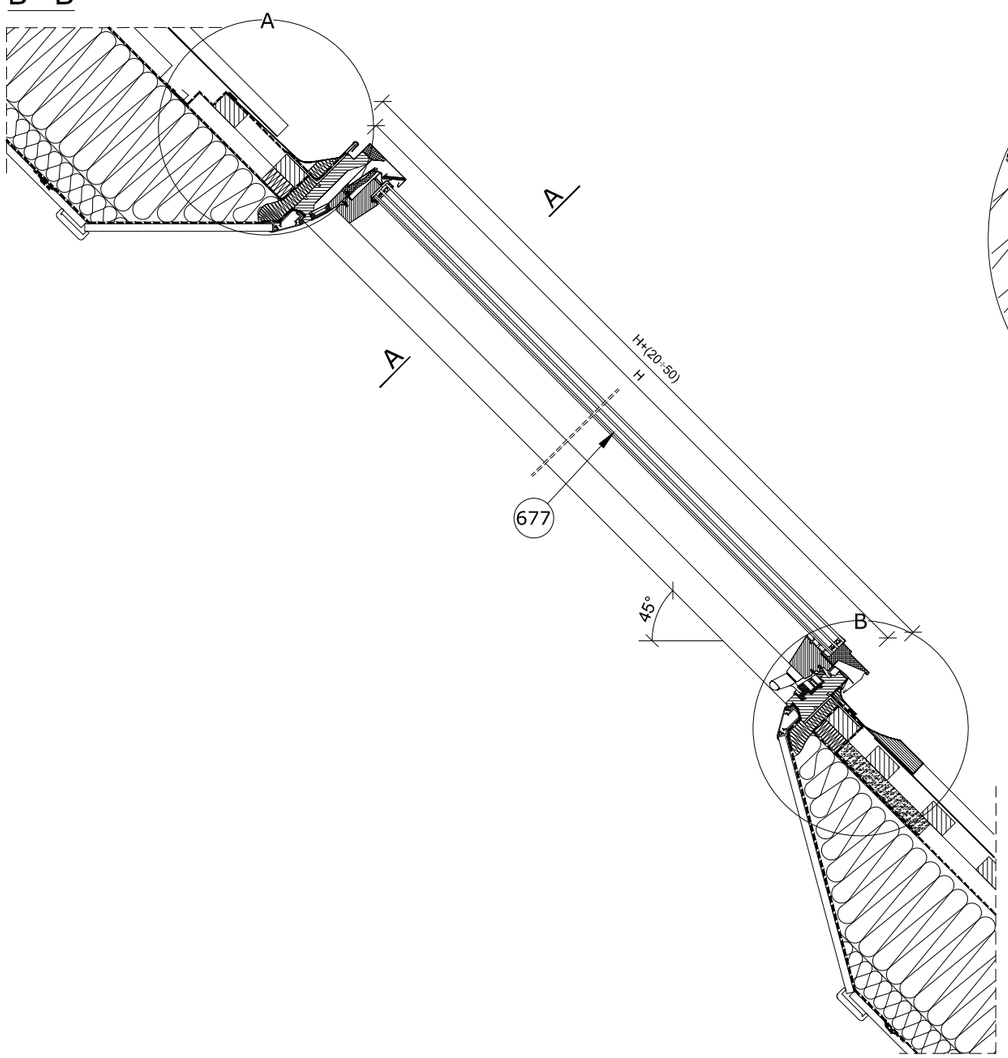

A

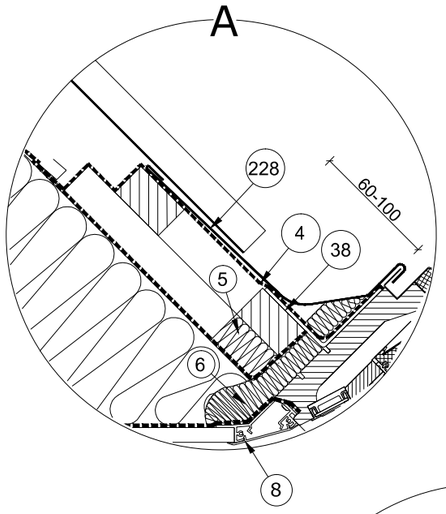

B

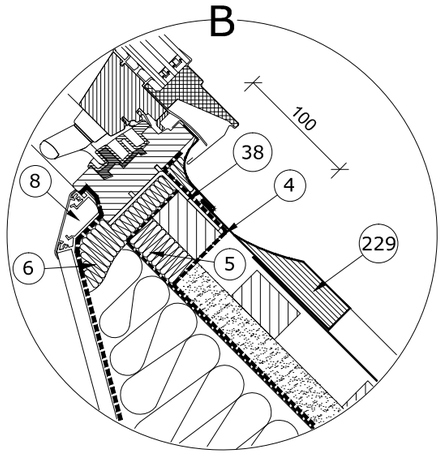

C

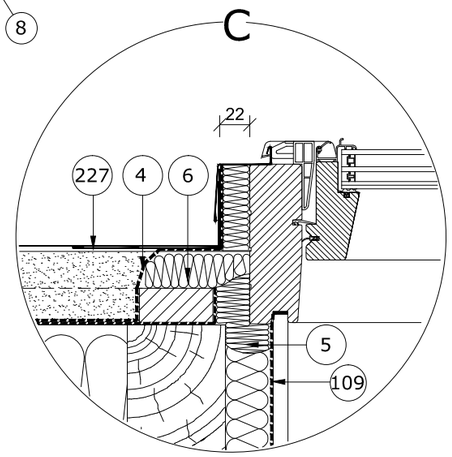

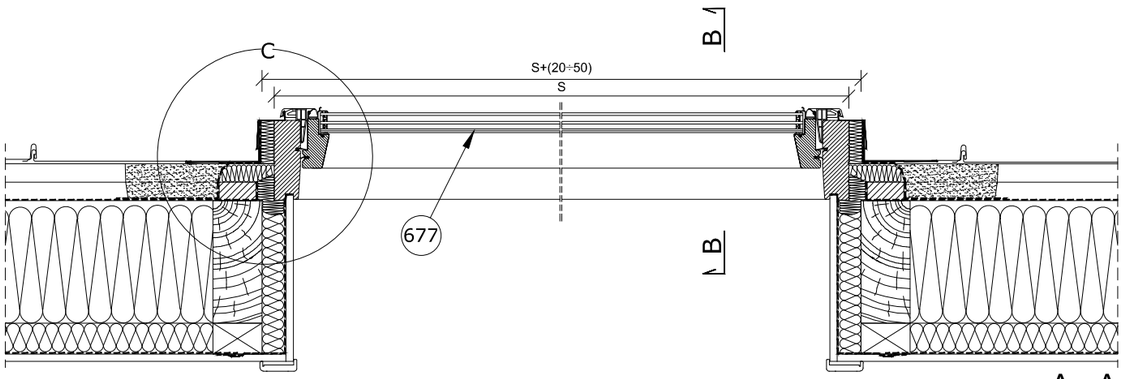

A - A

FTP-V P5		
Frame width S[mm]	Frame height H[mm]	Window symbol
457	601	
	781	46
	981	48
	1181	
	1401	
477	601	
	781	47
	981	49
	1181	
	1401	
547	601	
	781	01
	981	02
	1181	16
	1401	
657	601	32
	781	22
	981	03
	1181	04
	1401	14
777	601	33
	781	23
	981	05
	1181	06
	1401	07
937	601	34
	781	24
	981	15
	1181	08
	1401	09
1137	601	35
	781	25
	981	20
	1181	10
	1401	11
1337	601	36
	781	26
	981	12
	1181	18

1 - Water draining gutter FAKRO
4 - XDP FAKRO vapour permeable collar
5 - Tress made of sheep wool FAKRO (XDP)
6 - Blocks made of sheep wool FAKRO (XDP)
8 - XLW internal lining element FAKRO
38 - Installation bracket
109 - XDS air-tight flashing FAKRO
227 - EBV-PT THERMO flashing side element FAKRO
228 - EBV-PT THERMO flashing upper element FAKRO
229 - EBV-PT THERMO flashing lower element FAKRO
677 - FTP-V P5 preSelect FAKRO

FAKRO

FTP-V P5	EBV-PT THERMO	METAL ROOF PANEL	XLW	15° - 90°

Vertical and horizontal cross-section: FTP-V P5 roof window with EBV-PT THERMO flashing. Metal roof panel.	FORMAT:	SCALE:	DATE:
	A3	1:10/1:5	01.2018

Warning! The present drawing is for informational-demonstrative purposes only and as such cannot constitute a basis for performance. All dimensions presented in this drawing should be verified on site. Because of the fact that the drawing is a schematic one, FAKRO shall not assume any responsibility for the actual installation quality on the roof. This drawing is FAKRO's property and cannot be published or used publicly without our written consent.